THIS DRAWING IS UNPUBLISHED. RELEASED FOR PUBLICATION - , - .
© COPYRIGHT - BY TYCO ELECTRONICS CORPORATION. ALL RIGHTS RESERVED.

LOC	DIST
GP	00

REVISIONS

P	LTR	DESCRIPTION	DATE	DWN	APVD
	C	REVISED PER ECO-09-002944	20MAR2009	CR	SB

△1 HOUSING: PCT, UL94V-0, COLOR: BLACK.
POSTS: PHOSPHOR BRONZE.

△2 GOLD FLASH OVER
PALLADIUM-NICKEL PLATE, 0.00076 [.000030] MIN TOTAL ON MATING AREA,
0.00254 [.000100] MIN TIN PLATE ON SOLDER END, ALL OVER
0.00127 [.000050] MIN NICKEL UNDERPLATE ON ENTIRE POST.
OR
0.00076 [.000030] MIN GOLD PLATE ON MATING AREA,
0.00254 [.000100] MIN TIN PLATE ON SOLDER END, ALL OVER
0.00127 [.000050] MIN NICKEL UNDERPLATE ON ENTIRE POST.

△3 DATUMS S & T TO BE ESTABLISHED BY CUSTOMER.

△4 ALTERNATE LOCATION/ORIENTATION FOR POSTITION #1 INDICATOR.

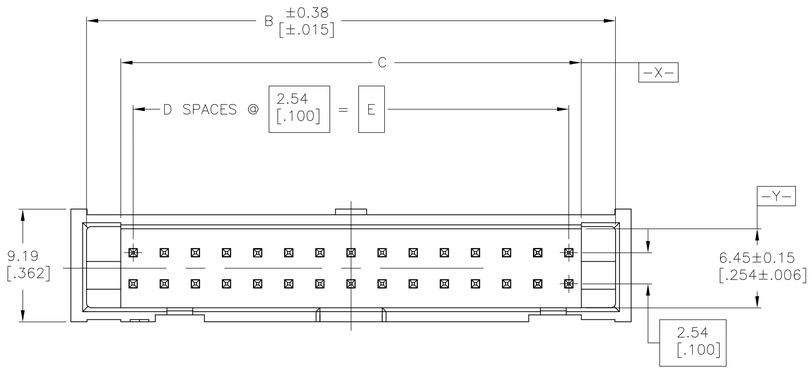

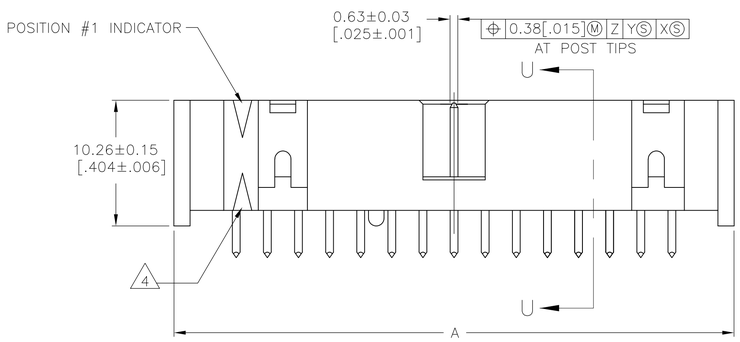

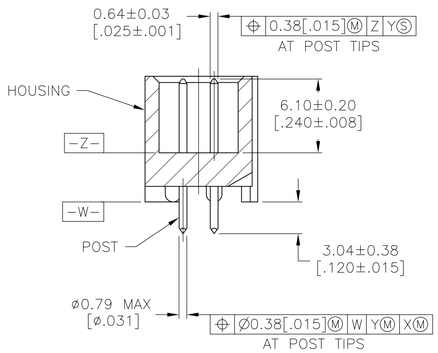

SECTION U-U

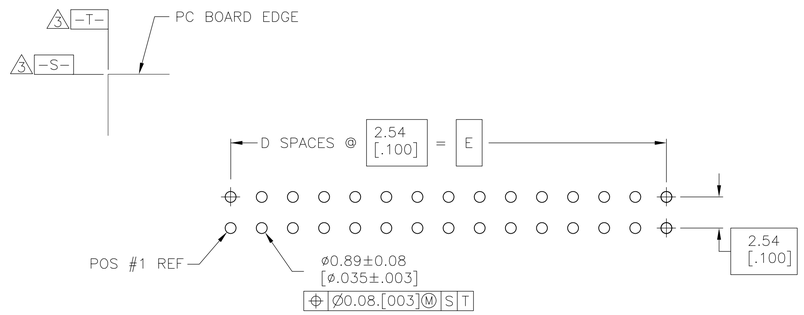

RECOMMENDED PC BOARD LAYOUT
(VIEWED FROM CONNECTOR SIDE)

35.56 [1.400]	14	37.59 [1.480]	43.08 [1.696]	45.72 [1.800]	30	1888870-1
E	D	C	B	A	NO OF POS	PART NUMBER

THIS DRAWING IS A CONTROLLED DOCUMENT.

DIMENSIONS: mm [INCHES]

TOLERANCES UNLESS OTHERWISE SPECIFIED:
0 PLC ± -
1 PLC ± -
2 PLC ± -
3 PLC ± 0.13[.005]
4 PLC ± -
ANGLES ± -

MATERIAL △1
FINISH △2

DWN B. MCMASTER 30JAN07
CHK S.BOLASH 30JAN07
APVD S. BOLASH 30JAN07
PRODUCT SPEC —
APPLICATION SPEC —
WEIGHT —

Tyco Electronics
Tyco Electronics Corporation
Harrisburg, PA 17105-3608

NAME HEADER ASSEMBLY, VERTICAL, LOW PROFILE, IDC

SIZE	CAGE CODE	DRAWING NO	RESTRICTED TO
A1	00779	C-1888870	—

CUSTOMER DRAWING
SCALE 4:1 SHEET 1 OF 1 REV C