~~THIS DRAWING IS UNPUBLISHED~~. RELEASED FOR PUBLICATION 2014
© COPYRIGHT 2008 TE Connectivity AMP España S.L.U. ALL RIGHTS RESERVED.

REVISIONS					
P	LTR	DESCRIPTION	DATE	DWN	APVD
	K	ECR-14-002421	18FEB2014	LD	JS

1 PACKAGING: SEE TABLE

2 MAY BE USED WITH
- 336330
- 336352
- 1375202
- 1375204
- 1711345

3 MAXIMUM CABLE DIAMETER MARKING IN APPROX. AREA.

4 MATERIAL: TPE-S, UL LISTED. FLAME RATING UL94- HB.

5 PRODUCT SPEC:
- 108- 1990 or
- 108-19102

6 APPLICATION SPEC:
- 114-13035 or
- 114-22008 or
- 114-93006

7 BOOT WITH PREVIOUS REVISION IS MADE OF PVC AND THE LOOKING IS ACCORDING TO VIEW "BOOT, PREVIOUS REV".

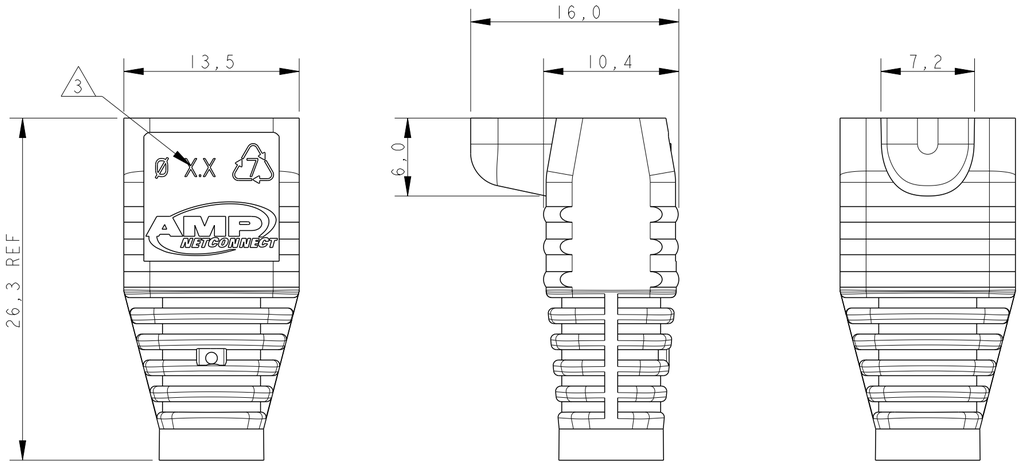

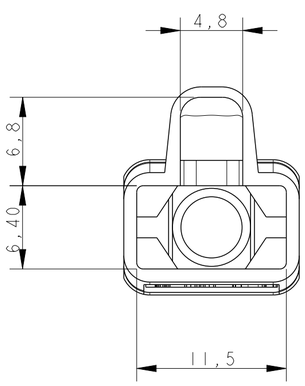

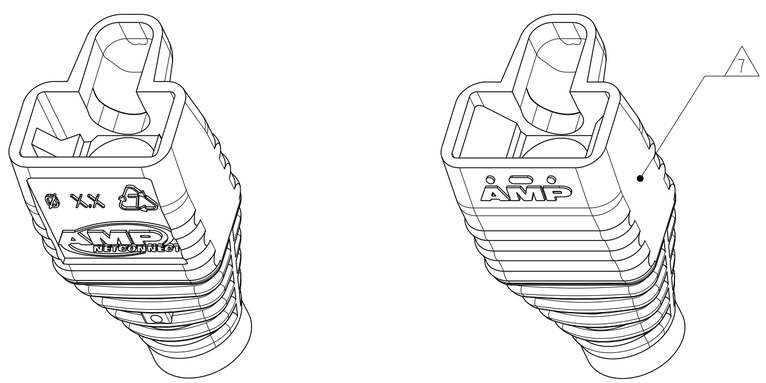

BOOT, PREVIOUS REV

PACKAGING QUANTITY	STATUS	APPLICABLE CABLE RANGE	MAX CABLE DIAM 3	COLOR	PART NUMBER
100	ACTIVE	Ø5.3 - Ø6.0	Ø6.0	BLACK	9-737893-7
				YELLOW	9-737893-6
				GREEN	9-737893-5
				BLUE	9-737893-4
				RED	9-737893-3
				GREY	9-737893-2
				WHITE	9-737893-1
100	ACTIVE	Ø4.7 - Ø5.5	Ø5.5	BLACK	8-737893-7
				YELLOW	8-737893-6
				GREEN	8-737893-5
				BLUE	8-737893-4
				RED	8-737893-3
				GREY	8-737893-2
				WHITE	8-737893-1
2400	ACTIVE	Ø5.3 - Ø6.0	Ø6.0	BLACK	5-737893-7
				YELLOW	5-737893-6
				GREEN	5-737893-5
				BLUE	5-737893-4
				RED	5-737893-3
				GREY	5-737893-2
				WHITE	5-737893-1
2400	ACTIVE	Ø4.7 - Ø5.5	Ø5.5	BLACK	4-737893-7
				YELLOW	4-737893-6
				GREEN	4-737893-5
				BLUE	4-737893-4
				RED	4-737893-3
				GREY	4-737893-2
				WHITE	4-737893-1
	SUPERSD BY 5-737893-7	Ø5.5 - Ø6.0	Ø6.0	BLACK	1-737893-7
	SUPERSD BY 5-737893-6			YELLOW	1-737893-6
	SUPERSD BY 5-737893-5			GREEN	1-737893-5
	SUPERSD BY 5-737893-4			BLUE	1-737893-4
	SUPERSD BY 5-737893-3			RED	1-737893-3
	SUPERSD BY 5-737893-2			GREY	1-737893-2
	SUPERSD BY 5-737893-1			WHITE	1-737893-1
	SUPERSD BY 4-737893-7	Ø5.0 - Ø5.5	Ø5.5	BLACK	737893-7
	SUPERSD BY 4-737893-6			YELLOW	737893-6
	SUPERSD BY 4-737893-5			GREEN	737893-5
	SUPERSD BY 4-737893-4			BLUE	737893-4
	SUPERSD BY 4-737893-3			RED	737893-3
	SUPERSD BY 4-737893-2			GREY	737893-2
	SUPERSD BY 4-737893-1			WHITE	737893-1

THIS DRAWING IS A CONTROLLED DOCUMENT.

DIMENSIONS: mm

TOLERANCES UNLESS OTHERWISE SPECIFIED:
0 PLC ±-
1 PLC ±0.3
2 PLC ±0.2
3 PLC ±-
4 PLC ±-
ANGLES ±2°

MATERIAL: See notes -

FINISH: - -

DWN L. de Dios 27May08
CHK R. Sole 28May08
APVD J. Sanabra 30May08

PRODUCT SPEC: See notes

APPLICATION SPEC: See notes

WEIGHT: -

CUSTOMER DRAWING

TE Connectivity

NAME: BOOT, 8 POSN, ROUND CABLE, MOD PLUG
-

SIZE	CAGE CODE	DRAWING NO	RESTRICTED TO
A2	-	C-737893	-

SCALE 3:1 SHEET 1 OF 1 REV K