| SIGN | DATE | DESCRIPTION | APPROVER |
|---|---|---|---|
| 1 | 2009.09.07 | The design is changed | Jacke |
| 2 | 2009.09.07 | The electrical is changed | Jacke |
| 3 | 2010.03.31 | Add the 2p mark | Jacke |

***THIS IS CAD DRAWING, DO NOT REVISE MANUALLY!!!***

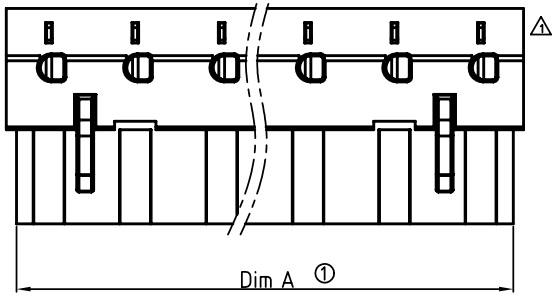


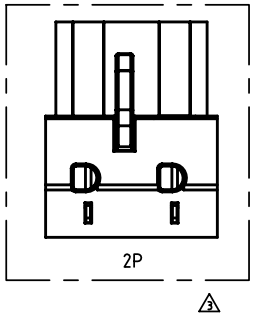


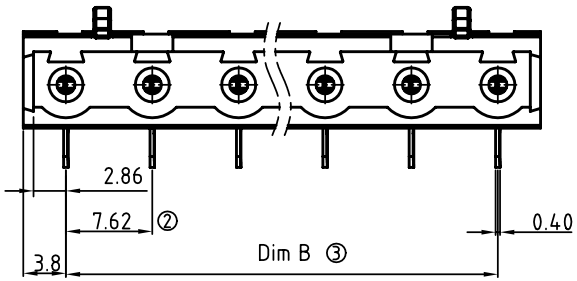


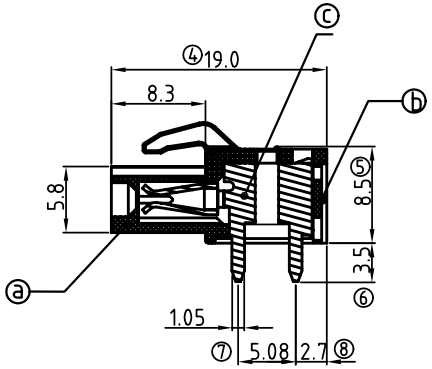


Materials

| | | |
|---|---|---|
| Item a | Terminal body | Thermoplastic (UL94V-0) |
| Item b | Terminal Cover | Thermoplastic (UL94V-0) |
| Item c | Female contact | PhBz(CuSn), Tin plated |

2 Electrical

- Voltage rating: 300VAC
- Current rating: 20A
- Withstanding Voltage: 1.6kv
- Operating temperature: -40°C to +115°C
- Soldering temperature: 250°C±10°C/5 Sec
- Safety Approval: c UL us

V7 xx 0 1 x 1 xxxx G

No. OF POLES
02 2 CONTACTS
03 3 CONTACTS
... ...
16 16 CONTACTS

Color
0 Black (RAL9005)
2 Red (RAL3001/D)
3 Orange(RAL2011/P)
4 Yellow(RAL1018/A)
5 Green(RAL6018/T)
6 Blue (RAL5015/A)
8 Grey(RAL7035/D)

G: Pb<40000ppm

0000: "@" Logo (Standard)
000A: "ANYTEK" Mark
Any special item by customer requst. please contact sales department.

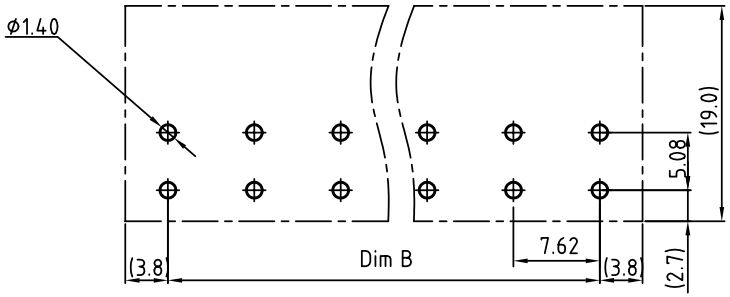


PCB LAYOUT

| POLE | 2 | 3 | 4 | 5 | 6 | 7 | 8 | 9 | 10 | 11 | 12 | 13 | 14 | 15 | 16 |
|---|---|---|---|---|---|---|---|---|---|---|---|---|---|---|---|
| B | 7.62 | 15.24 | 22.86 | 30.48 | 38.1 | 45.72 | 53.34 | 60.96 | 68.58 | 76.2 | 83.82 | 91.44 | 99.06 | 106.68 | 114.3 |
| A | 13.34 | 20.96 | 28.58 | 36.2 | 43.82 | 51.44 | 59.06 | 66.68 | 74.3 | 81.92 | 89.54 | 97.16 | 104.78 | 112.4 | 120.02 |
| Tol. | ±0.15 | | | | | ±0.20 | | | | | | ±0.30 | | | |

**ANYTEK**

**INSPECTION COPY**

ALL RIGHTS RESERVED. REPRODUCTION OR ISSUE TO THIRD PARTIES IN ANY FORM WHATEVER IS NOT PERMITTED WITHOUT WRITTEN AUTHORITY FROM THE PROPRIETOR. PROPERTY OF ANYTEK TECHNOLOGY CO., LTD

| | | | | | |
|---|---|---|---|---|---|
| TITLE | V7 7.62 W/O flange Series Right-angle (2P~16P) | | | | |
| PART NO. | V7xx01x1xxxxG | | | DWG NO. | 8V70502 |
| APPROVED | CHECKED | DESIGNED | DRAWN | CUST NO. | |
| | | Jacke 2010.03.31 | Jacke 2009.09.07 | UNIT: mm | |
| | | | | SCALE: 1/4 | |
| | | | | SHEET: 01/01 | REV.: D |

| Tolerance | |
|---|---|
| X. | ±0.5 |
| X.X | ±0.3 |
| X.XX | ±0.1 |
| X° | ±1° |